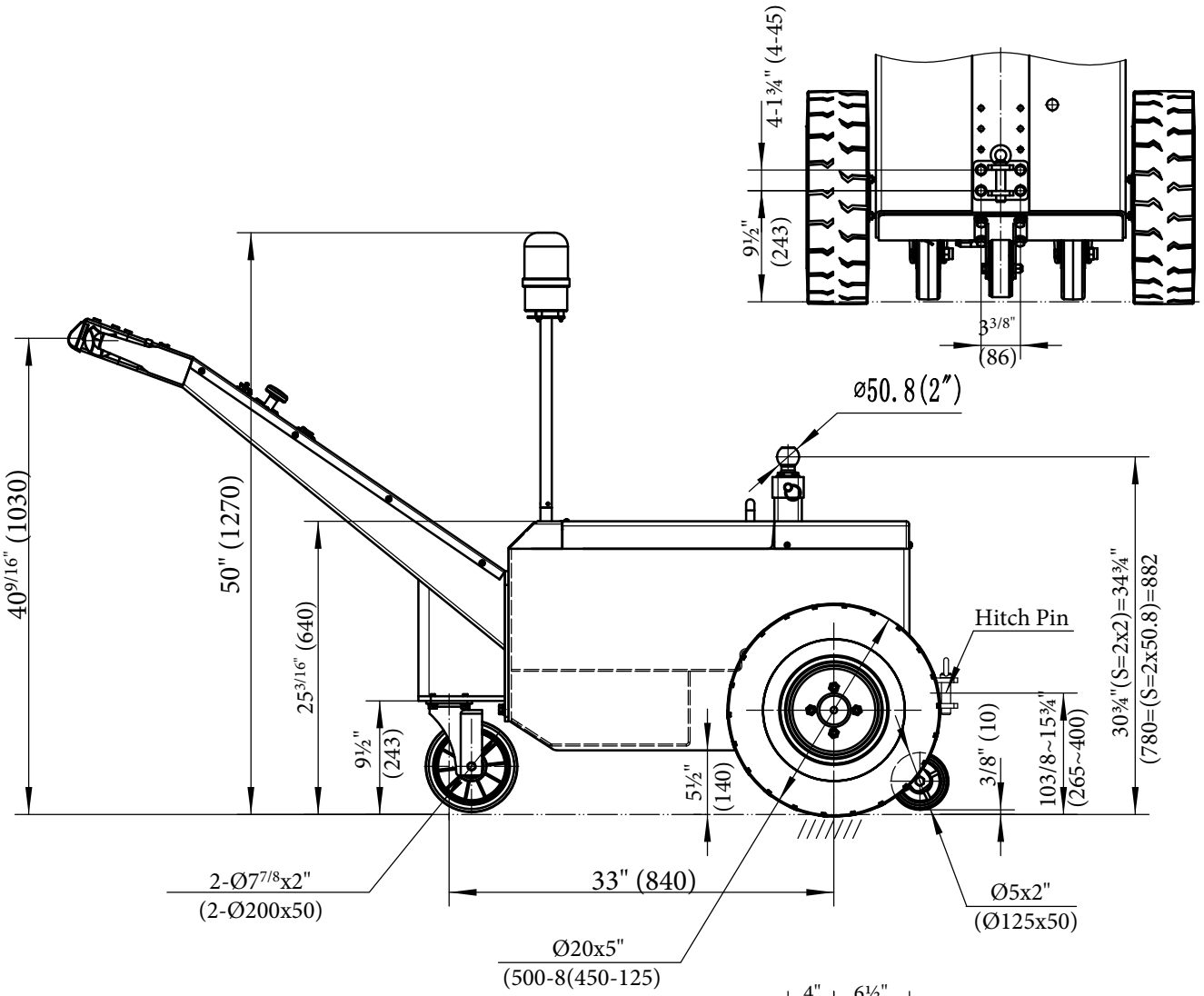

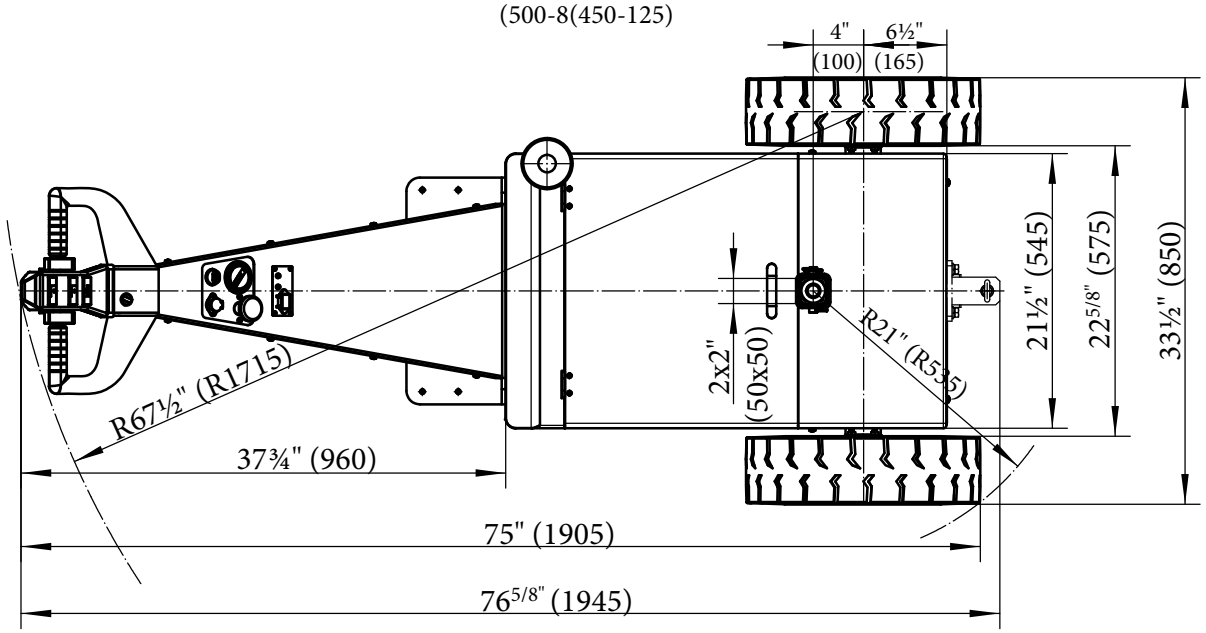

Specifications:
Model: E-TUG-HD-100
Capacity:10,000 lbs
Drive: C05L-142-AC-2200-16-3000
Gear Ratio: 57:1
Drive Motor: AC16V/2200W
Controller: CP1232E-2321 (Curtis controller)
Battery: 4x6V/210Ah
Charger: 24/2x10amp
Speed w/o Load: 2~2.5 mph

VESTIL MANUFACTURING CORP.	
Model:	E-TUG-100-HD
Description:	Electric Powered Mover
DESIGN: TM	DATE: 10/22/2021