HYDRAULIC BOX DUMPER - HBD-4-36

APPROX WEIGHT: 1645.51 lbs.
DOES NOT INCLUDE WEIGHT OF POWER OR PACKAGING!!!

*** ANY ADDITIONS, DELETIONS, OR OMISSIONS MUST BE CORRECTED ON THIS DRAWING AS THIS DRAWING WILL BE CONSIDERED ALL INCLUSIVE ***
ALL GRAPHICS PROVIDED ARE FOR REFERENCE ONLY. IF CERTAIN DIMENSIONS ARE CRITICAL PLEASE VERIFY THOSE DIMENSIONS WITH YOUR SALESPERSON

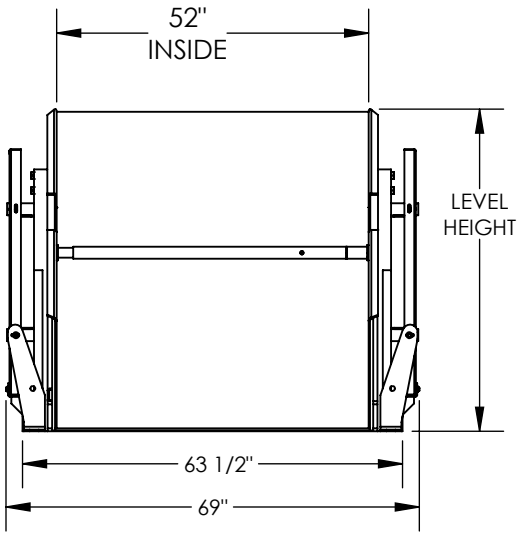

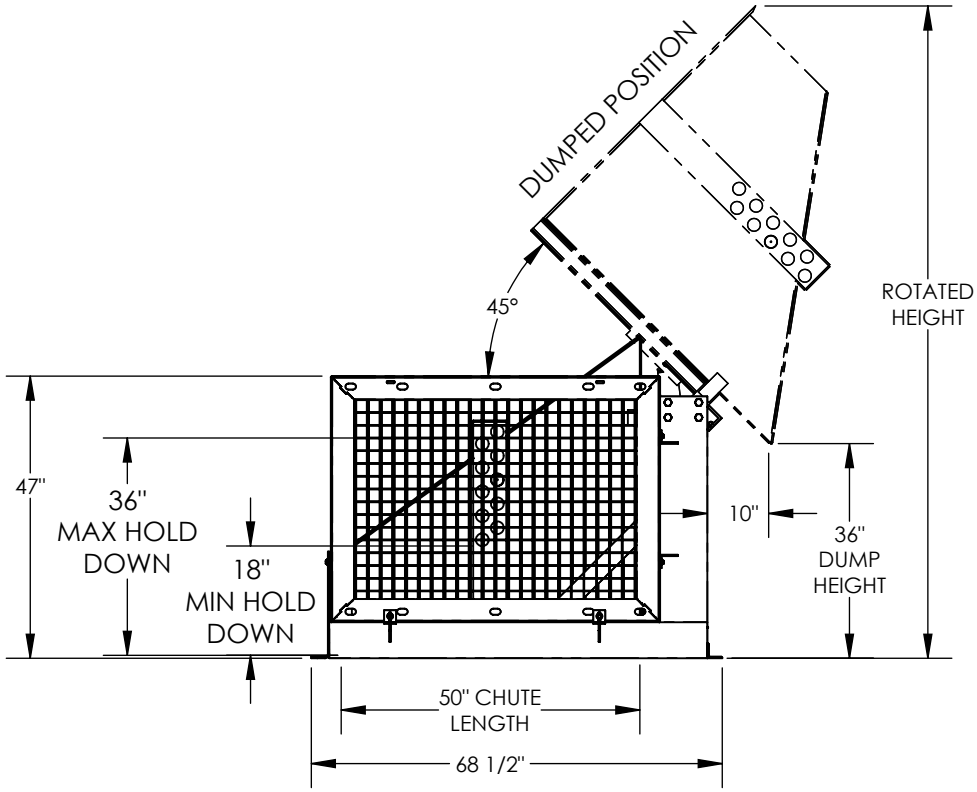

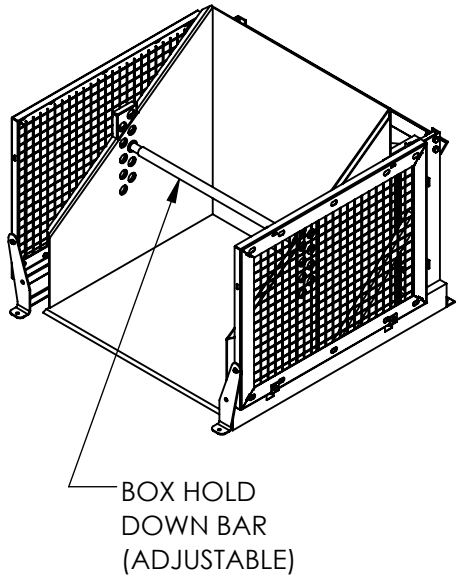

NOTE: SINGLE PH. PLUG-IN UNITS WILL HAVE
APPROX 120 SEC DUMP / 33 SEC LOWER

DIMENSION TOLERANCE ± 1/4"

STANDARD FEATURES

HYDRAULIC BOX DUMPER
MODEL NUMBER IS HBD-4-36
CHUTE IS 52" W X 50" L (USABLE)
DUMPER CAPACITY IS 4000 LBS.
DUMP HEIGHT IS 36"
HOLD DOWN WILL ACCEPT BOXES
18" TO 36" HIGH W/ HOLES EVERY 2"
FRAME WIDTH IS 69"
FRAME LENGTH IS 68 1/2"
LEVEL HEIGHT IS 53 1/2"
ROTATED HEIGHT IS 111"
DUMP ANGLE IS 45°
CHROME PLATED CYLINDER WITH
EMERGENCY STOP VELOCITY FUSE
WARNING: CHECK STATE AND LOCAL CODES!!
FRAME AND CHUTE DURABLE LIQUID PAINT BLUE FINISH
GUARDS AND HOLD DOWN BAR TOUGH BAKED IN POWDER COATED YELLOW FINISH

PLEASE CIRCLE SPECIFICATIONS:

POWER	AC	~~* DC~~	~~* AIR/OIL~~	
MOTOR VOLTAGE	~~115~~	~~208~~	~~230~~	460
DEDICATED CIRCUIT REQUIRED				
MOTOR PHASE	~~SINGLE~~	THREE		
CONTROL	HAND	~~* FOOT~~		
~ ALL BATTERY CHARGERS ARE 115V AC ~				
* BATTERY CHRG.	REMOTE	ON-BOARD		
* CHRG. INDICATOR	YES	NO		

** AVAILABLE AT ADDITIONAL COST*

SPECIAL FEATURES

NONE

APPROVAL

I, THE UNDERSIGNED, AGREE THAT THE PRODUCT AS REPRESENTED SATISFIES DESIGN AND DIMENSION REQUIREMENTS. I ALSO ACKNOWLEDGE MY DUTY TO CONFIRM PRODUCT AND INSTALLATION COMPLIANCE WITH ALL APPLICABLE FEDERAL, STATE AND LOCAL REGULATIONS AND STANDARDS.

UNITS REQUIRING APPROVAL DRAWINGS OR MODIFIED ARE NON-RETURNABLE

[ ] As drawn [ ] As marked

Signed:_____ Date:_____

Printed Name:_____

LEAD TIME WILL START UPON RECEIPT OF SIGNED APPROVAL DRAWING

DISTRIBUTOR'S NAME: VESTIL MANUFACTURING		P.O.# X
		W.O.# X
DRAWN BY: CA	DATE: 10/27/2011	SALES: X
REFERENCE: X	SCALE: 1:32	FILE NAME: 34-007-036
QUOTED LEAD TIME: X	QUOTE # X	