PORTABLE PALLET INVERTER W/ STRADDLE LEGS - PI-P-SL-3000-3254

*** ANY ADDITIONS, DELETIONS, OR OMISSIONS MUST BE CORRECTED ON THIS DRAWING AS THIS DRAWING WILL BE CONSIDERED ALL INCLUSIVE ***
ALL GRAPHICS PROVIDED ARE FOR REFERENCE ONLY. IF CERTAIN DIMENSIONS ARE CRITICAL PLEASE VERIFY THOSE DIMENSIONS WITH YOUR SALESPERSON

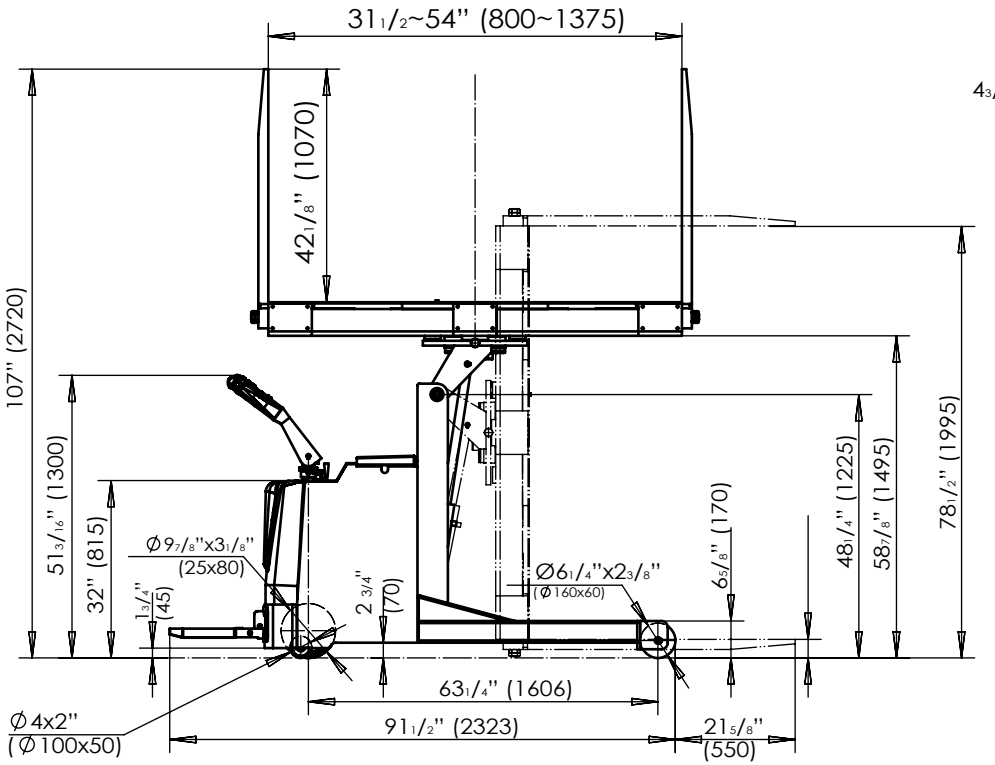

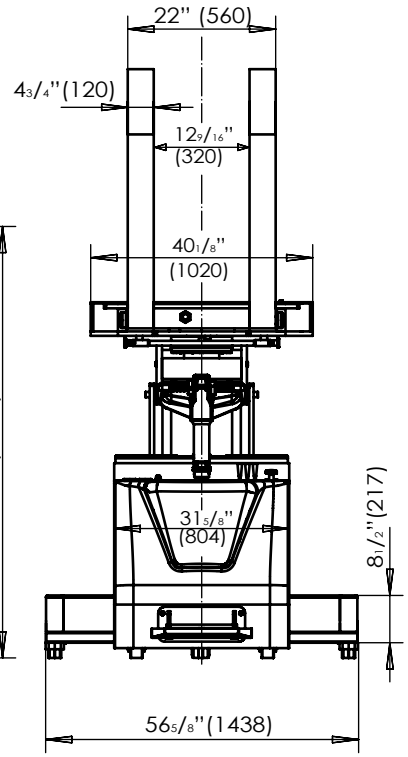

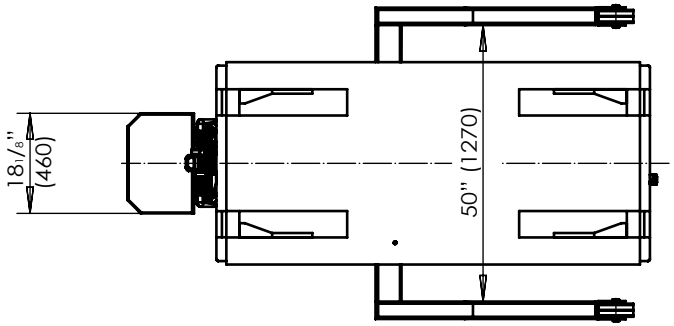

SPECIFICATIONS:

MODEL NO: PI-P-SL-3000-3254
CAPACITY: 3,000 LBS
LOWERED HEIGHT: 3 1/4"
FORKS SIZE: 22" X 42 1/8"
FORK OPENING: 32 1/2" - 54"
TURNING RADIUS: 84 1/2"
OVERALL SIZE: 113" X 56 1/2" X 82 1/2"
NET WEIGHT: 2,500 LBS
POWERED DRIVE
POWERED TILT UP / DOWN
MANUAL ROTATION
HAND CONTROL
TOUGH BAKED IN POWDER COATED BLACK AND YELLOW FINISH

DIMENSION TOLERANCE ± 1/2"

TRAVEL SPEED UNLOADED: 2.8 m/h
TRAVEL SPEED LOADED: 1.8 m/h
DRIVE MOTOR: 24V / 1.2KW
LIFT MOTOR: 24V 2.0KW
BATTERY: 4 - 6V / 200Ah
BATTERY CHARGER: 24V
CONTROLLER: 2207 A-5102

FORK CLAMPING W/O LOAD: 9.5 SEC
FORK OPENING W/O LOAD: 10 SEC
FORK CLAMPING W/ LOAD: 14 SEC
FORK OPENING W/ LOAD: 7.5 SEC
FORK TILTING UP W/O LOAD: 15 SEC
FORK LOWERING DOWN W/O LOAD: 14 SEC
FORK TILTING UP W/ LOAD: 23 SEC
FORK LOWERING DOWN W/ LOAD: 13.5 SEC

APPROVAL

I, THE UNDERSIGNED, AGREE THAT THE PRODUCT AS REPRESENTED SATISFIES DESIGN AND DIMENSION REQUIREMENTS. I ALSO ACKNOWLEDGE MY DUTY TO CONFIRM PRODUCT AND INSTALLATION COMPLIANCE WITH ALL APPLICABLE FEDERAL, STATE AND LOCAL REGULATIONS AND STANDARDS.

UNITS REQUIRING APPROVAL DRAWINGS OR MODIFIED ARE NON-RETURNABLE

[ ] As drawn [ ] As marked

Signed:_____ Date:_____

Printed Name:_____

LEAD TIME WILL START UPON RECEIPT OF SIGNED APPROVAL DRAWING

DISTRIBUTOR'S NAME: VESTIL MANUFACTURING		P.O.# X
		W.O.# X
DRAWN BY: TM	DATE: 04/04/2022	SALES: X
REFERENCE: X	SCALE: NTS	FILE NAME: PI-P-SL-3000-3254
QUOTED LEAD TIME: X	QUOTE # X	