Instruction Manual

Drum Lifter



DL500DS

Note: The Owner/Operator must read carefully and understand all the information presented here before operation.

THANK YOU FOR USING THIS DRUM LIFTER. FOR YOUR SAFETY AND CORRECT OPERATION, PLEASE CAREFULLY READ THIS INSTRUCTION BEFORE USING IT.

NOTE: All of the information reported herein is based on data available at the moment of printing. The factory reserves the right to modify its own products at any moment without notice and incurring in any sanction. So it is suggested to always verify possible updates**.**

WARNING

- Read and understand the entire owner's manual before using the drum lifter.
- This drum lifter is designed for lifting drums in vertical position only.
- The drum must have a top lip.
- Do not load the drum lifter beyond its rated capacity of 750 lbs.
- Inspect the drum lifter before each use. If there is damage or distortion to any part, the drum lifter must be removed from service until it is repaired or replaced.
- Make sure the drum is secured by the lifting arms before raising.
- Do not allow anyone to stand beneath a raised drum.
- Never leave a drum unattended in the raised position.
- Do not use this drum lifter for other than its intended use.
- Failure to comply with these warnings may result in personal injury and/or property damage.

DESCRIPTION

This product is a professional tool used for lifting, transporting and stowing 33 gallon and 55 gallon steel or polyethylene drums open or

closed. It is designed with a 3 point drum contact with stabilizing arm which reduces damage to the drum and automatically engages the drum rim when lowered.

UNPACKING

When unpacking your unit, check carefully for shipping damage. If damage has occurred, immediately file a claim with the carrier.

SPECIFICATION

Capacity	500KG
Drum Type Lifted	33 gallon and 55 gallon. closed-head steel & poly drums
Net Weight	6KG

OPERATION

1. 55 gallon drums – unit is shipped at the 55 gallon setting with the clip pin (item 4) in the OUTER hole of the drum lifter (fig 1).
   33 gallon drums – remove clip pin (item 4), and lifter arm and reinstall in INNER hole of the drum lifter (fig 2). Repeat for each of the 3 lifter arms. Check to make sure all parts are secure.
2. Attach the drum lifter vertically to the hook of your hoist, chain block, etc.
3. To lift drum lower drum lift onto drum making sure the 3 moving pads (item 2) overhangs rim of drum and slack is out of hoist chain (fig 3).
4. Slowly raise drum lifter while assuring that all three moving pads securely contact the drum rim. Raise drum slightly off ground and recheck the contact of each moving pads for a secure fit (fig 4). Continue rising to desired height.
5. To remove drum lower until slack is out of hoist chain. Grasp one of the moving pads and rotate upwards and out of the way. Push

towards remaining moving pads to disengage them from drum (fig 5).

Fig 1

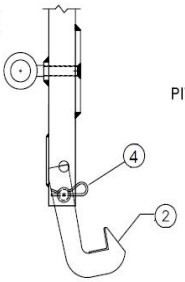

IN 55 GALLON DRUM POSITION

Fig 2

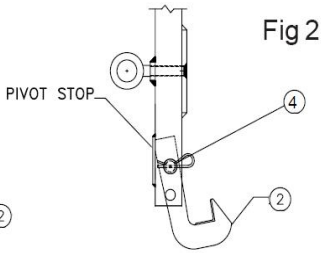

IN 30 GALLON DRUM POSITION

Fig 3



Fig 4



Fig 5



Maintenance

(1) Lubricate moving parts periodically.

(2) Check bolts and nuts frequently for tightness.

EXPLODED VIEW & PART LIST

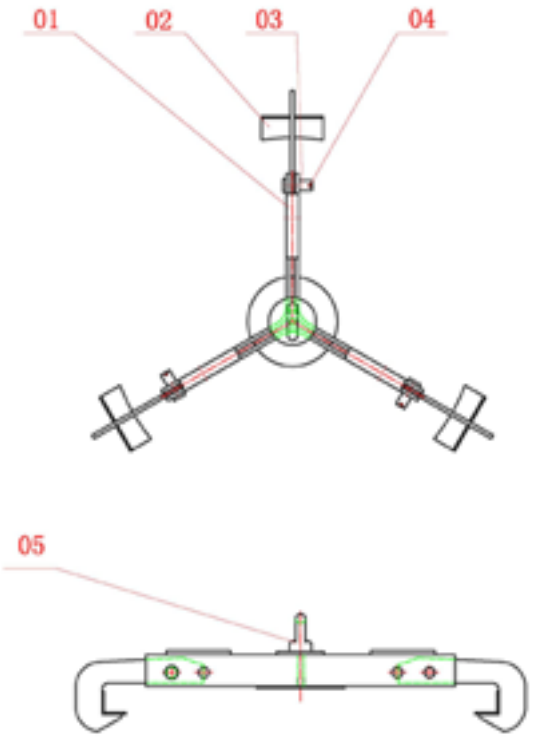

Item	Part No	Qty	Description
1	01	1	Main Assembly
2	02	3	Moving Pads
3	03	3	Shaft
4	04	3	Clip Pin
5	05	1	Hook