DWG NO: 21-003-059	LOCATION: K:\ARCHIVE\21-30\	MODEL: 21-001-059	

STEEL QUICK LIFT - Survey Sheet - PEL-400-57/72

Inquiry Date:_____ Due Date:_____
Contact:_____
Company:_____
Phone:_____
Fax:_____
E-mail:_____

PREVIOUS ORDER NUMBER OR QUOTE NUMBER, IF APPLICABLE:
_____

PLATFORM SIZE (STD: 24" W X 20" L) NOT CRITICAL

WIDTH: _____ LENGTH: _____ _____

Travel: (STD: PEL-400-57: 6 1/2"-57",PEL-400-72: 6 1/2"-72")
Lowered Height: _____ _____
Raised Height: _____ _____
Outrigger Height (STD: 6"): _____ _____

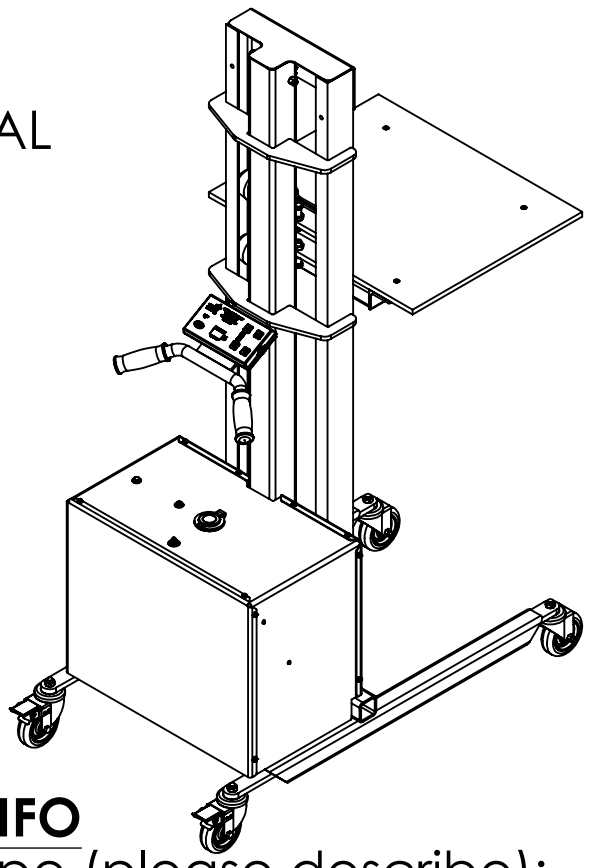

Application Information:

Duty Cycle: _____
Special Temperature Requirements: _____

Additional Notes:

_____

_____

_____

Quote options:
_____Exactly as specified
_____Cost effective / Closest to Vestil standard
_____Quickest to ship
Requested Delivery Date:_____

Power Options (STANDARD: 24 V DC):

_____**PEL-400-AC**
(230V Single Phase Supply Options)

_____**PEL-400-AC/DC**
(Operates on either 24V DC Battery or 230V Single Phase)

_____**PEL-2PB**
(Handheld Push-Button Control)

_____**PEL-RRC**
(Wireless Remote Control)

_____**PEL-INDEX-4**
(Programmable Height Indexing - 4 set points)

_____**PEL-INDEX-21**
(Programmable Height Indexing - 21 set points)

LOAD INFO
Load Type (please describe):

_____

_____

Load Size:
Length: _____
Width: _____
Height: _____

Load Weight: _____

LOAD HANDLING ATTACHMENTS

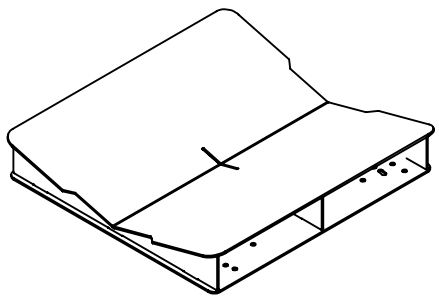

PEL-VBLK [ ]

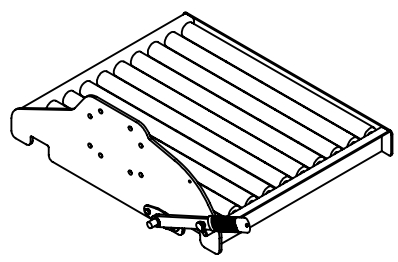

PEL-CONV [ ]

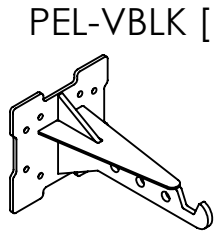

PEL-HOOK [ ]

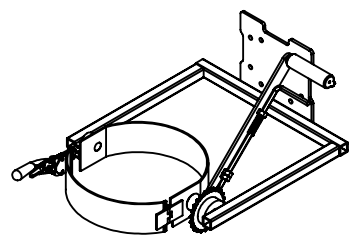

PEL-PAIL [ ]

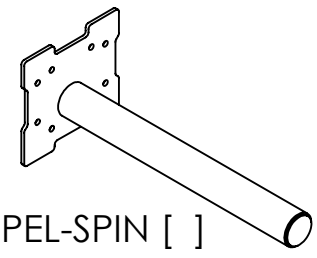

PEL-SPIN [ ]

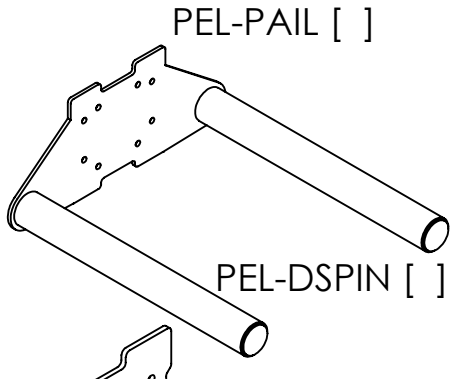

PEL-DSPIN [ ]

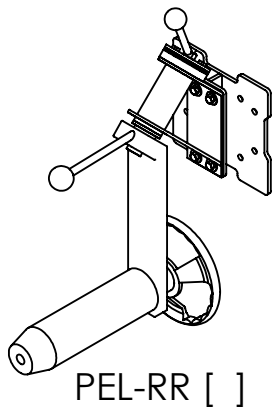

PEL-RR [ ]

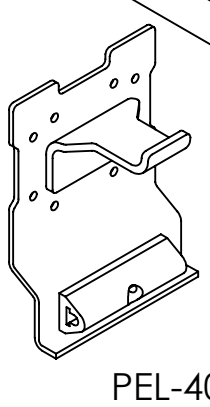

PEL-400-KEG-KT [ ]

*All options may not be available on all models

Vestil Manufacturing Company * Angola, IN 46703 * Ph- 260-665-7586 * Fx- 260-665-1339

Vestil Manufacturing Co.	MODEL NO: PEL-400-57/72	DESCRIPTION: STEEL QUICK LIFT - SURVEY SHEET	DRAWN BY: S.JEGATHA	DWG. NO. 21-003-059